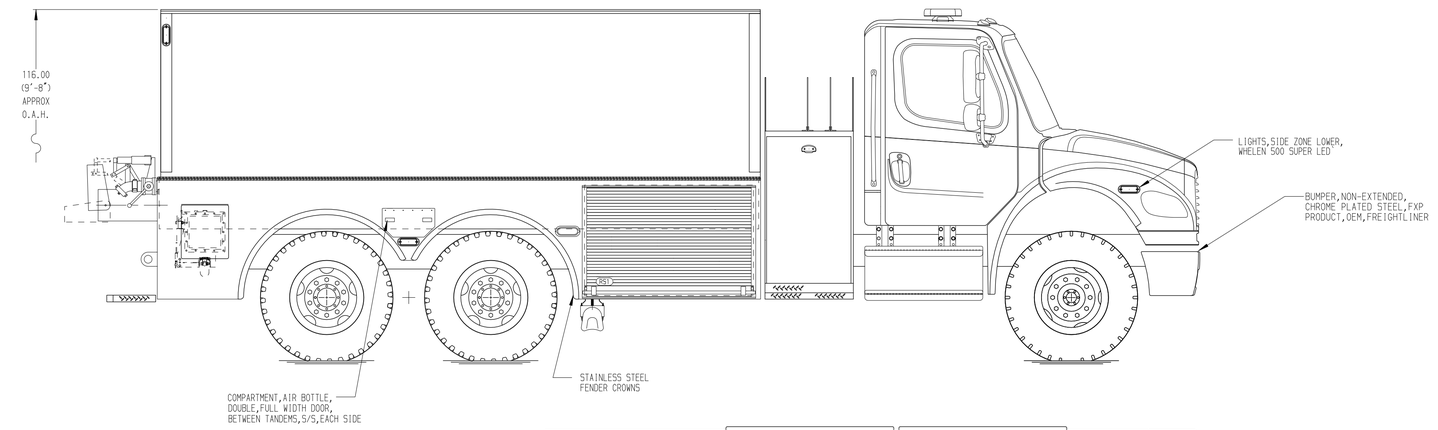


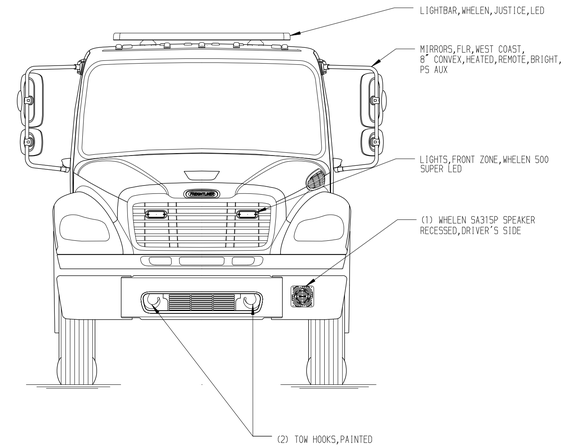


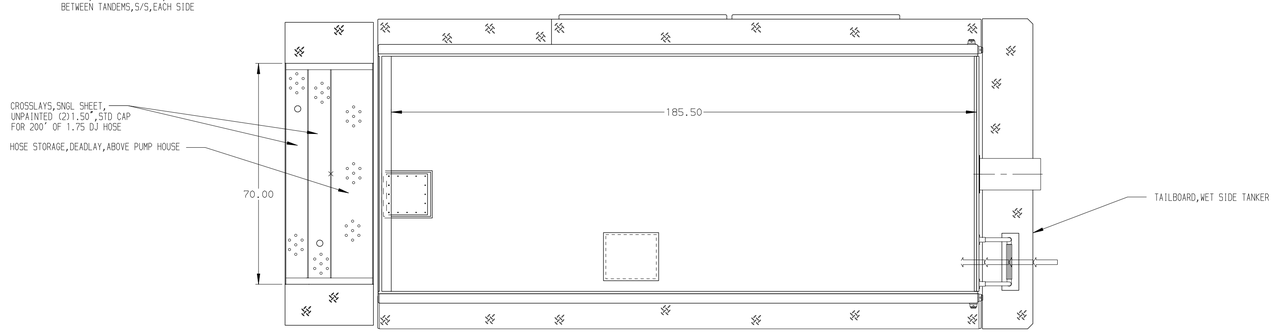


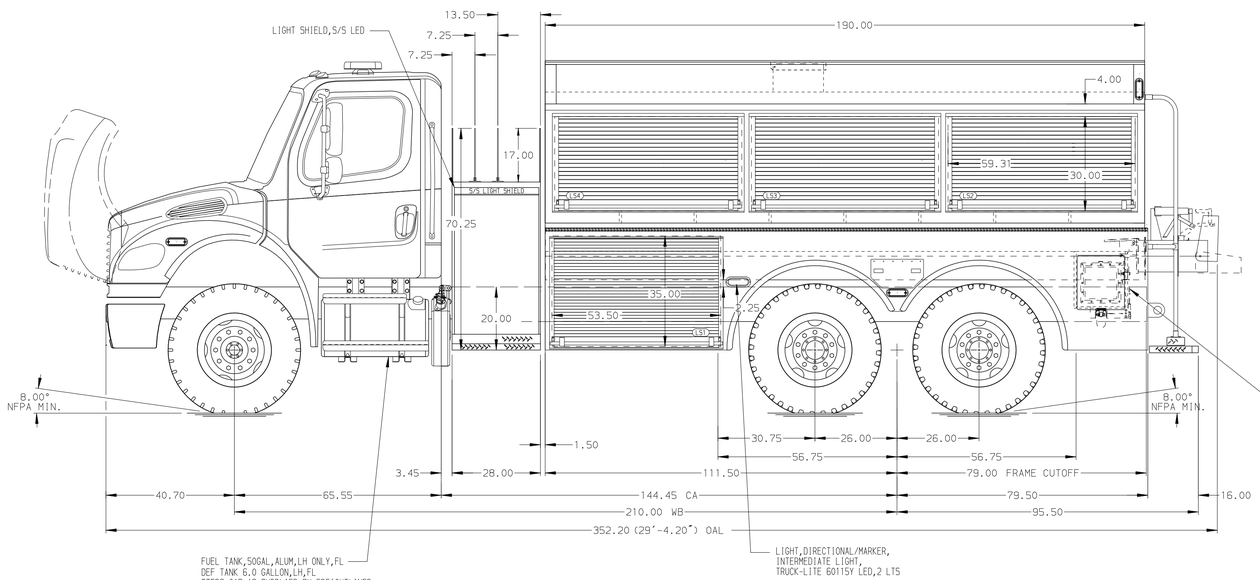


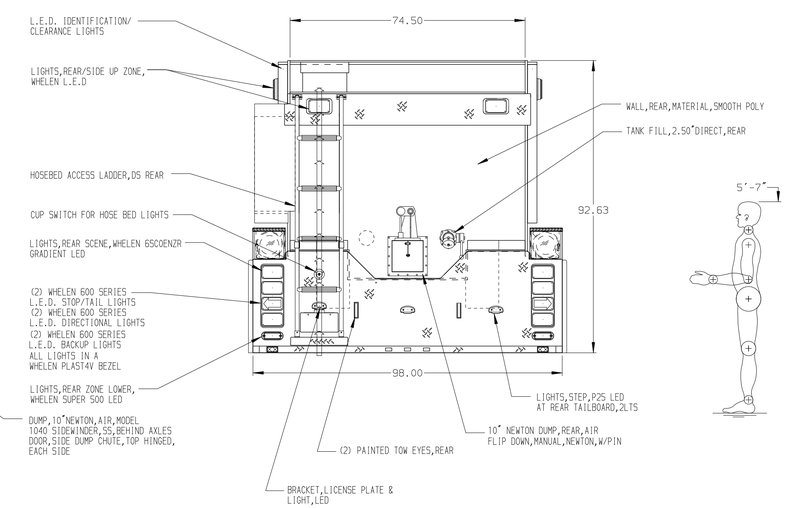


ALUMINUM BODY

NOTE

DIMENSIONS SHOWN ARE APPROXIMATE AND ARE SUBJECT TO MINOR DEVIATIONS AS MAY OCCUR OR BE NECESSARY IN CONSTRUCTION.
MINOR DETAILS NOT SHOWN.

| REV | DATE | BY | CH |
|---|---|---|---|
| ▽ | - | - | - |

CHASSIS DATA
MAKE: FL
MODEL: M2-106

Pierce MANUFACTURING INC.
BRADENTON, FLORIDA

TITLE: 3000 GALLON POLY WETSIDE TANKER,HIGH SIDE,SIDE DUMPS
SINGLE STAGE PTO PUMP

FOR: PIERCE MANUFACTURING INC.
BRADENTON, FLORIDA

DWG NO.: SF-2240AD

| | |
|---|---|
| JOB NO. | SF-2240 |
| SCALE | 1:24 |
| DATE | |
| DRAWN BY | JLA |
| 14MAR20 | |
| CHECKED BY | CAG |
| 17APR20 | |
| SHEET SIZE | D |
| SHEET NO. | 1 OF 1 |

View File Created 17-APR-2020 07:44:04